INSTALLATION AND MAINTENANCE GUIDE

FOR RESIDENTIAL DOORS

READ AND KEEP THIS MANUAL FOR REFERENCE

This guide describes the steps to follow for the installation of a door in sections and the hardware that is required for its installation.

This document will be essential to guide you through this process. You must remember that the garage door must be properly installed to assure you the maximum warranty, secure and durable service. This way the installation will be completely safe that will guaranty an optimal functioning of your Garex door.

This guide is property of Garex and no reproduction is allowed without a written consent from Garex.

The english version of this document can be accessed online:
www.garexdoors.com/en/documentation
Ce document peut être téléchargé gratuitement à partir du site web : **www.portesgarex.com/fr/documentation**

In the reading of this guide you will find the necessary steps to make the installation and the maintenance of your garage door.

However, if during the installation of the door you have any questions, feel free to contact us at :

Phone. 1 800 748-3317
Fax. 1 877 744-3443
info@garex.ca
www.garexdoors.com

QUÉBEC
610, rue Principale, Val-Alain
Québec, Canada G0S 3H0

MONTRÉAL
10020, rue Mirabeau, Anjou
Québec, Canada H1J 1T6

NEW-BRUNSWICK
62, Saint-André Rd
Saint-André (NB) E3Y 3S9

GOMENG/11-2018/Printed in Canada

TABLE OF CONTENT

GENERAL INSTRUCTIONS 03

HARDWARE 04

REQUIRED TOOLS

THE STEPS TO FOLLOW FOR THE INSTALLATION

- **STEP 1 -** Preparation of opening 05
- **STEP 2 -** Preparation of the pannels 06
- **STEP 3 -** Installation of the vertical rails 08
- **STEP 4 -** Installation of the horizontals rails 10
- **STEP 5 -** Installation of the torsion or the extension springs and the cables 12
- **STEP 6 -** Installation of the weatherstrips 15
- **STEP 7 -** Installation of the side lock 15
- **STEP 8 -** Anchorage plate location 16

INSTALLATION OF THE LOW HEADROOM HARDWARE 17

MAINTENANCE GUIDE 18

FAQ 19

GAREX WARRANTY 20

READ AND KEEP THIS MANUAL FOR REFERENCE

We highly recommend that Garex doors be installed and serviced by professionals. This way the installation will be completely safe that will guaranty an optimal functioning of your Garex door.

READ THIS DOCUMENT BEFORE INSTALLING AND USING YOUR NEW GARAGE DOOR.

GENERAL INSTRUCTIONS

-1. In this guide, the right and the left will always be mentioned from the inside view of the garage.

- 2. Punchs are made on the doors at the position where the hinges must be installed. They also indicate the location of the steel anchorage plates used for the installation of the central hinges.

- 3. The pieces at the - 3 table, must be identified and separated, they will be installed on the right or left side of the door.

- 4. Garex doors are supplied with its hardware components and contain a springs set with additional instructions for an adequate installation.

- 5. The replacement parts are available at your authorized retailer. For the good treatment of your replacement parts orders, always supply the name of the part, the model number with the width and the height of the door (L x H). To find a retailer near you; consult our Web site www.garexdoors.com

- 6. Missing parts? Contact us free of charge at 1 800 748-3317, parts will be replaced in the most brief deadlines.

- 1

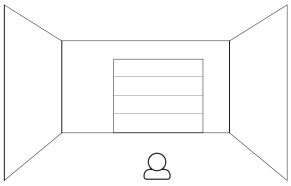

- 2

PUNCHS

To identify where the hinges should be installed.

#1 BOTTOM	Inside ↓
#2 BARLOCK	Inside ↓
#3 INTERM.	Inside ↓
#4 TOP	Inside ↓

- 3

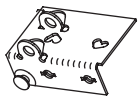

THE CORNER SUPPORTS
for the inferior panels

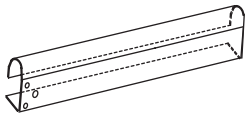

VERTICAL RAILS

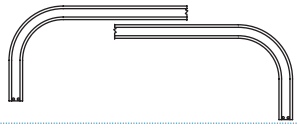

HORIZONTAL RAILS

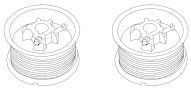

THE ENROLMENT DRUMS
in the case of torsion springs

EXTENSION SPRING

GAREX

HARDWARE

The drawings of parts in the table below are for illustrative purposes and do not represent the contents of a particular door model. (Not Actual Size)

1/4 inches x 1 inche Self tapping screw Head Hex	1/4 inch flange nut	Perforated horizontal angle
1/14-14 x 1 1/4 inches Hex head metal screw	5/16 inches Nut Hex	Top bracket
5/16 inches x 1-1/2 inches Lag screw	Rollers	Bottom bracket
5/16 inches x 3/4 inches Carriage bolt	Hinge	
1/4 inch es x 5/8 inches Track bolt		
3/4 inches 18 TPI Self-Drilling metal screws		

REQUIRED TOOLS

Tape Measure Pencil	Adjustable Wrench	Ratchet
Level	Torque Lock	Hammer
Bowsaw	Open End Wrench	Metalic bars 1/2 inches x 18 inches
Utility Knife	-Hammer Drill Bit Foret 4.5,8 and 10mm -Phillips Impact Driver Bit	
Step Ladder		

THE STEPS TO FOLLOW FOR THE INSTALLATION

STEP 1 - Preparation of the opening

Check that the dimensions of your door corresponds to the opening and that the raising (legs) are at level and perpendicular (at 90°) to the superior lintel (fig.1)

Check that the clearance available on top of the lintel and behind the door is sufficient for the operation the door.

Figure 1. How to prepare the frame for residential garage doors

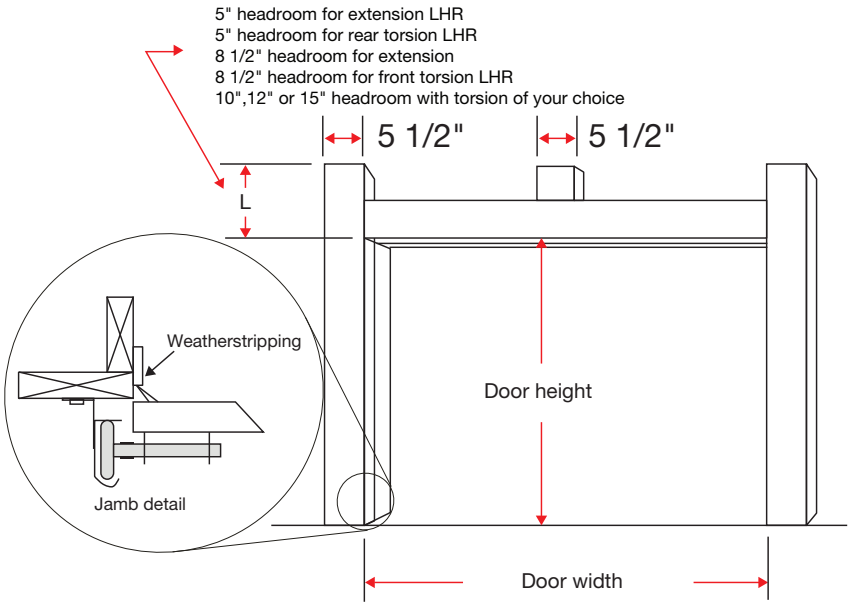

CLEARANCES

	DOOR OPERATION	
	MANUALLY	WITH DOOR OPENER
L- 10" radius for extension spring	9" (228 mm)	11" (280 mm)
L- 12" radius for extension spring	11" (280 mm)	13" (330 mm)
L- 10" radius for torsion spring	10" (254 mm)	12" (305 mm)
L- 12" radius for torsion spring	12" (305 mm)	14" (355 mm)
A- back required by the door	H + 12" (305 mm)	H + 40" (1016 mm)
H- door height	10" (254 mm)	12" (305 mm)

Figure 2. Global view of the required clearances

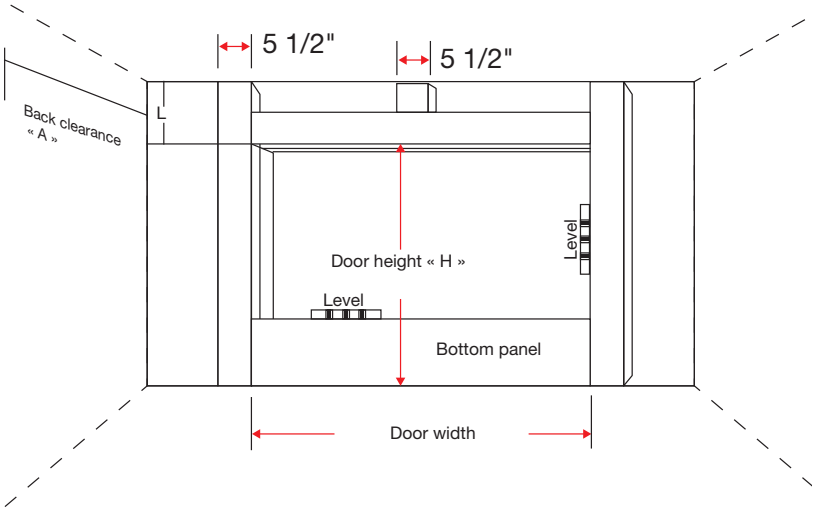

CLEARANCES

	RAYON			
	LHR	10"	12"	15"
RESIDENTIAL HARDWARE				
2" extension	4"	8½"	10"	n/d
2" rear torsion	5"	n/d	n/d	n/d
2" front torsion	8½"	10"	12"	15"
COMMERCIAL HARDWARE				
2" rear torsion	5"	s.o.	s.o.	s.o.
2" front torsion	8½"	n/d	12"	15"
INDUSTRIAL HARDWARE				
3" rear torsion	10"	n/d	n/d	n/d
3" front torsion	12"	n/d	n/d	16"
3" more than 18' high and/or 1000 pounds +				18"

THE STEPS TO FOLLOW FOR THE INSTALLATION

STEP 2 - Preparation of the pannels

The panels are identified as follows:

Bottom:	panel no. 1 (bottom panel)
Bar-lock:	panel no. 2
Inter:	panel no. 3
Top:	panel no. 4 (top panel)

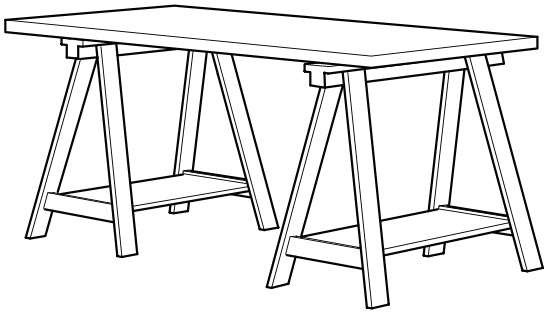

Figure 3. Location of the anchorage plates for the hinges

Distance between the plates in uniform manner

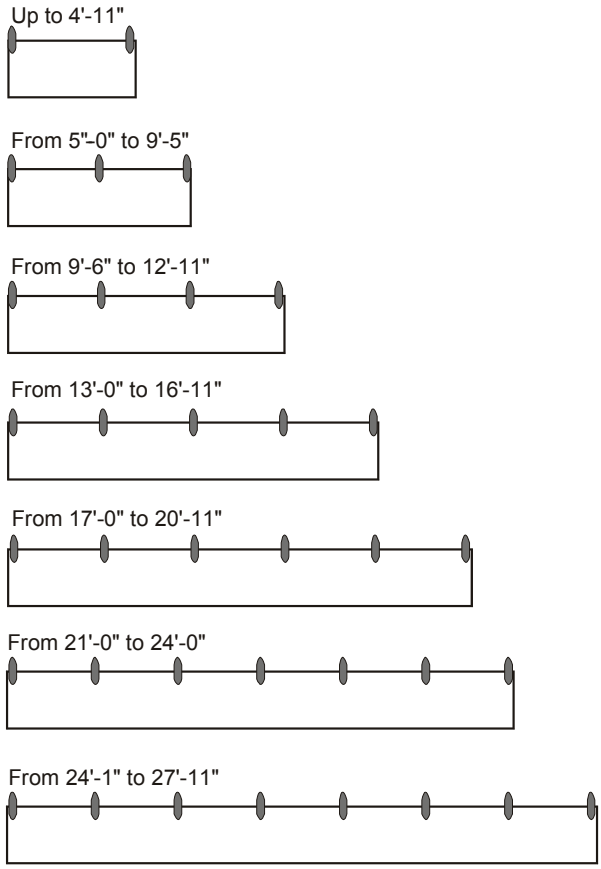

- To help you to find the interior side of the door, the injection hole is at the bottom of the panel.
- Place the panel identified "bottom" on two sawhorses, the exterior face towards the ground. The marks along the panels (interior side) indicate the location where the plates have been installed to allow the installation of the hinges.
- Refer figure 3 to locate them with precision based of the width of the panel.
- Install the bottom supports equals with the bottom of the p.v.c. or aluminum bottom moulding.

The locations of the center hinges are identified by two punchs in the bottom and the top of each of the panels.

There is a plate for double hinges inserted into the panels of 12' and more.

THE STEPS TO FOLLOW FOR THE INSTALLATION

STEP 2 - Preparation of the pannels (suite)

Use wood screws for the end hinges and for the top and bottom supports. Use the tek screws for the center hinges and the electrical operator if needed.

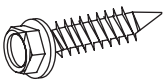

Wood screws

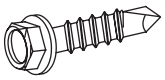

Tek screws

Self-Drilling Metal Screws

Screw in place the bottom supports on the bottom of the panel, make sure to place it at the limit of the bottom molding (where the weather strip starts). Then, screw the hinges that are identified by numbers. It is important to associate the correct hinge with the intended panel and to screw it the way illustrated below.

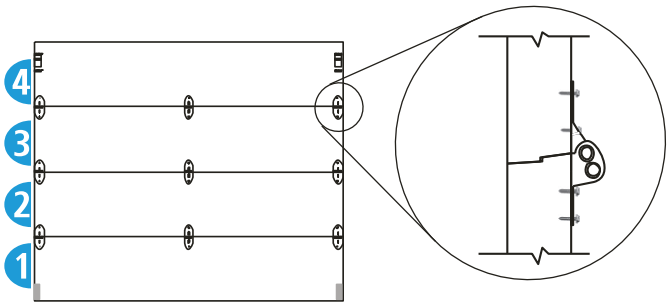

At the center of the panel, it is always the number 1 hinges. On the sides, the hinges start by the number 1 between the bottom panel and the bar-lock panel, the number 2 hinges between the bar-lock and the intermediate and it continues like this till the top panel. Once these are installed, install the rollers into the hole of the hinge furthest of the door.

Reinforcement struts

If installing reinforcement struts, refer to the illustration below for the set up, because these must be installed at the same time as the hinges..

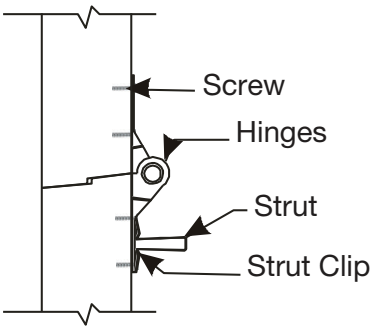

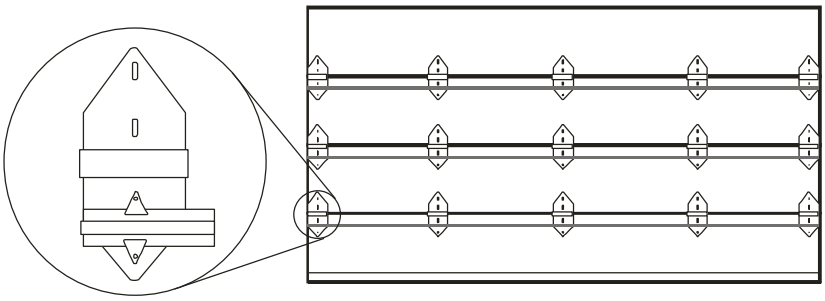

THE STEPS TO FOLLOW FOR THE INSTALLATION

STEP 3 - Installation of the vertical rails

- Verifying the hardware is important; we suggest that you take a moment to consider the sketches below.

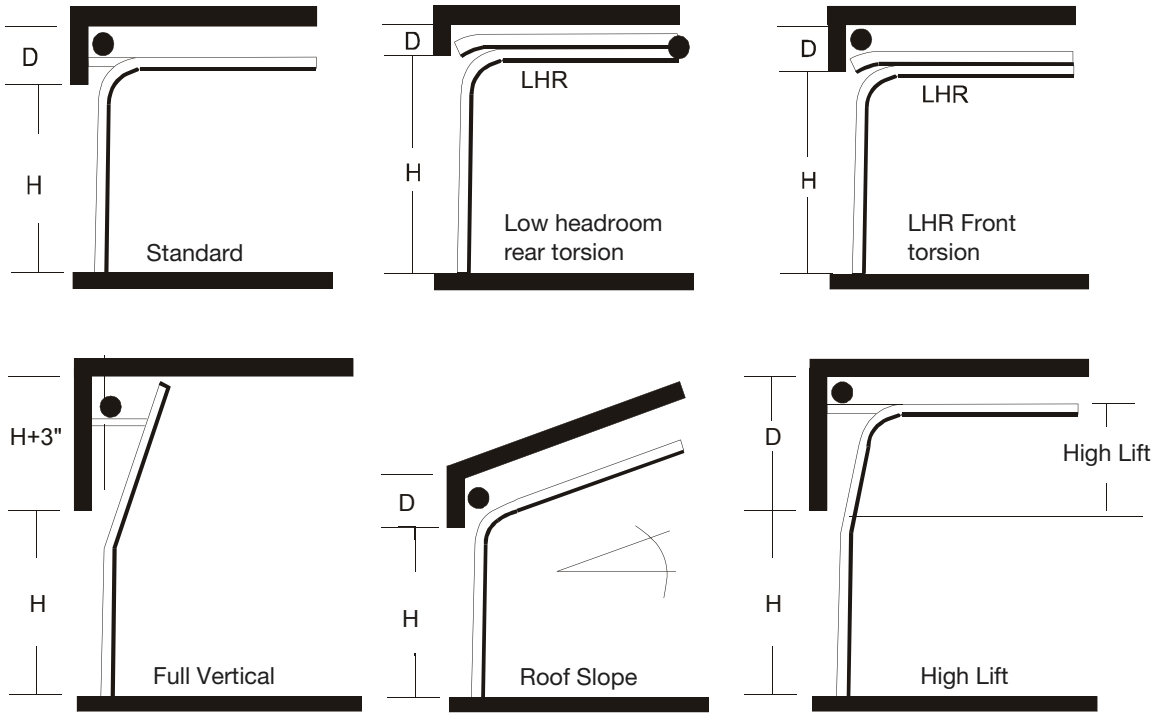

H= Height of the door D= Headroom

STARTING THE INSTALLATION

Place the bottom panel at the center of the opening and adjust it so that it is at level. If needed, place a shim to put the panel level, place also a shim the same thickness under the rail corresponding to that side of the panel. Then, attach the cables to the bottom bracket and insert the four (4) rollers into the hinges and the bottom bracket.

While holding the panel in place, screw the right rail on the leg leaving half an inch (½") between the rail and the side of the panel. Verify that the rail is at level. For the left rail, the other panels must be in place before installing it.

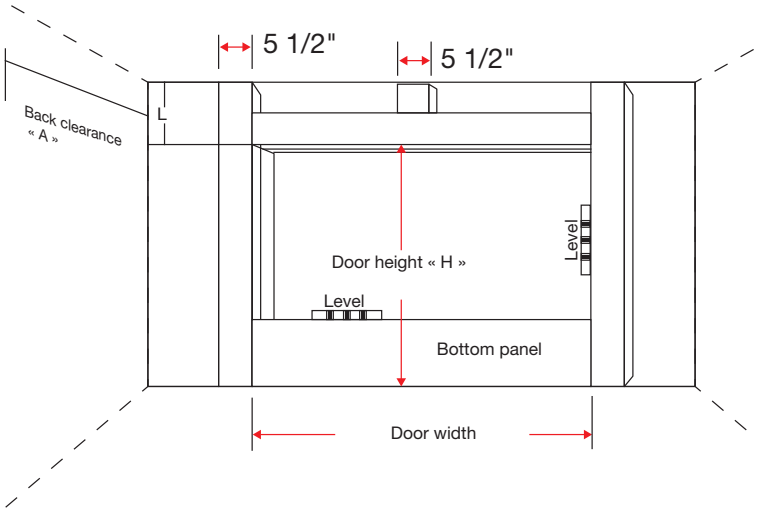

Installing the other panels

Insert the roller into the right hinge of the second panel. Raise and insert the section into the right rail and then deposit it onto the first panel. Join the two sections with the hinges.

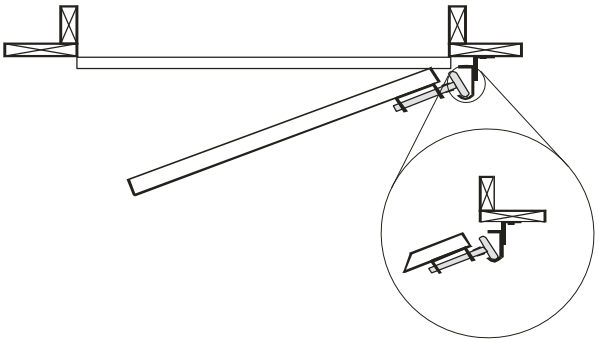

Repeat the same procedure for the other panels at the exception of the last panel, which is the top panel, and install it only after having installed the left rail as well as the horizontal rails.

Installation of the left rail

On the left side, place the rollers into the hinges on each of the panels. Insert the left rail into the rollers at 45 degrees as illustrated below.

Then, rotate the rail so that it is possible to install it to the leg by following the steps described below:

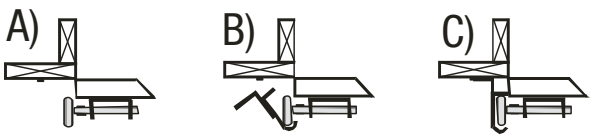

Verify that the superior extremities of the rails are at the same level. After verifications and adjustments, the following step is to definitely fix the rails in place, respecting the distance of half an inch (½") on the bottom and of half an inch (½") on the top, between the panels and the rails. Make sure that the rails are at level.

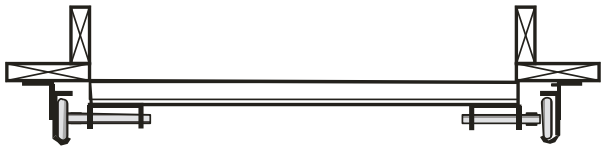

THE STEPS TO FOLLOW FOR THE INSTALLATION

STEP 4 - Installation of the top panel

Fix the steel angle of the horizontal rail and the curved part of the rail to the superior support of the vertical rail using track bolts plus cariage bolts and nuts. Note that the track bolts for the curved part have flat heads.

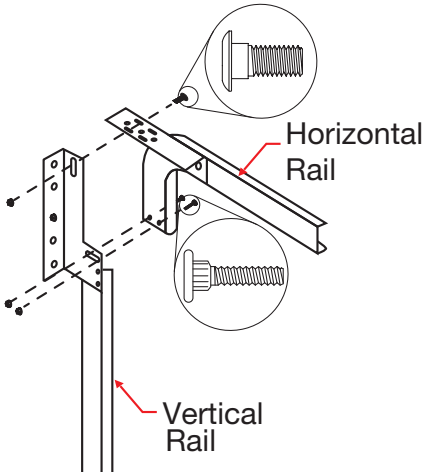

Installing the top panel (Part 1)

Place the top panel on top of the third panel and secure in place with vice grip pliers blocked in one of the side rails.

Screw the N.3 hinges to the bottom of the top panel. install the top brackets, these must be at 3 1/4" from the top of the panel.

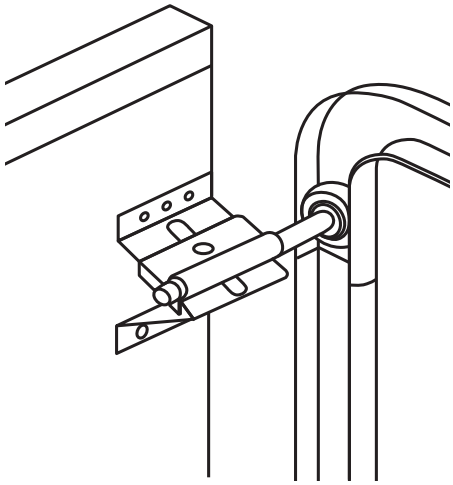

With the adjustment screw on the top bracket, verify that the top panel is aligned with the other panels. There must be no angles towards the interior or the exterior, which is why the top brackets must be adjusted so that the top panel forms a straight line with the other panels.

For low headroom elevations, fix the top brackets to the superior limit of the panel making sure that the top panel is straight with the rest of the panels. There must be no angles towards the interior or the exterior that is why the top supports must be adjusted so that the top panels forms a straight line with the rest of the panels.

The rollers on the top bracket will insert into the top rail (low headroom hardware have two horizontal rails on top of one another.)

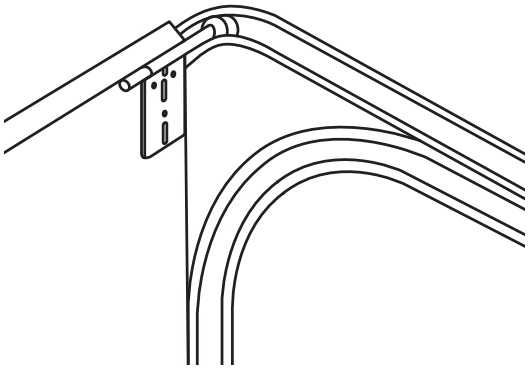

THE STEPS TO FOLLOW FOR THE INSTALLATION

STEP 4 - Bracing of the horizontal rails

Install the rear supports to the rails and ceiling, after verify that the distance between the rails is the same at all the levels, they must be paralel.

A good way to solidify the horizontal rails is to open the door half way up, at this point screw the rails to the ceiling using the angle bars that should be installed at a ninety degrees (90º) angle forming a triangle to assure that everything is strong and without movement.

Perforated angle

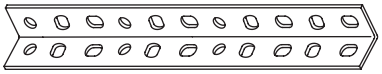

Assembly exemple

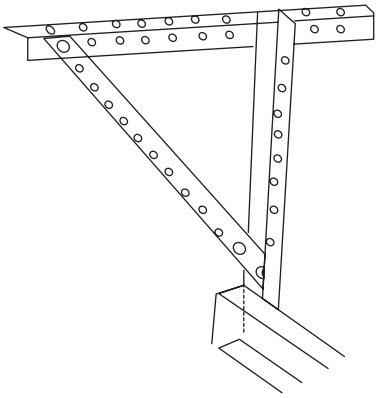

THE STEPS TO FOLLOW FOR THE INSTALLATION

STEP 5 - Installation of the torsion or the extension springs and the cables

Always use pliers (vice-grips) to block the door and enable it to move because a movement of the door could cause serious injuries.

During the installation of the torsion springs the door must be blocked in a closed position.

TORSION

On top, in the center of the lintel, a wooden block must be placed and screwed tightly in place on the wall, it is used as the anchor base.

Assemble the drums, the support plates, as well as the shaft with the spring(s). The drum on the right side is indicated by a RH or is the painted black.

The left drum is identified LH or is painted red. Bolt the top ending plate to the steel angles of the horizontal rails and anchor the center plates on the anchor block (the bevelled side towards the ground). Verify that the spring shaft is at level.

Install the cables on the drums and tighten the screws on the shaft. Start with the left hand drum.

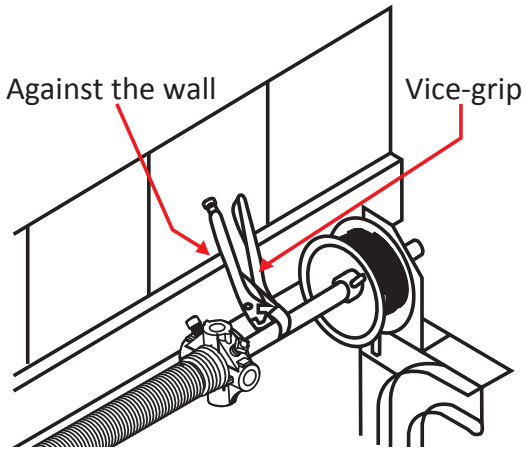

Block in position with vice-grip pliers, leaving the pliers on the shaft against the wall

The numbers of turns requires is written on the tag on the spring.

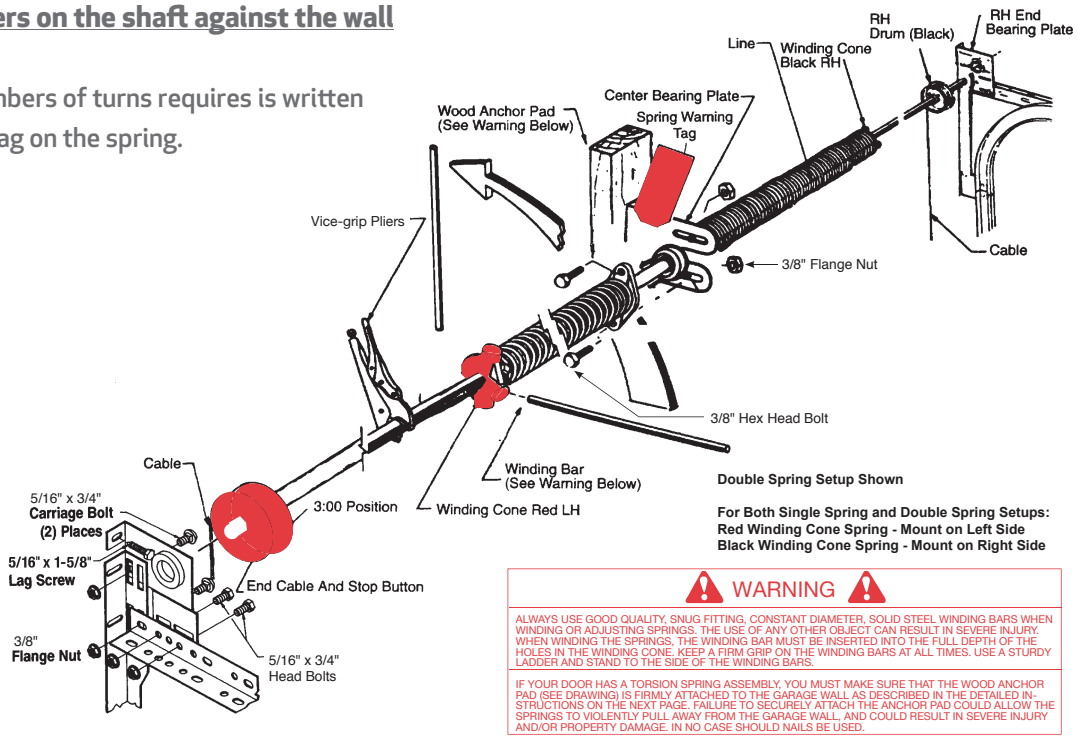

WARNING

ALWAYS USE GOOD QUALITY, SNUG FITTING, CONSTANT DIAMETER, SOLID STEEL WINDING BARS WHEN WINDING OR ADJUSTING SPRINGS. THE USE OF ANY OTHER OBJECT CAN RESULT IN SEVERE INJURY. WHEN WINDING THE SPRINGS, THE WINDING BAR MUST BE INSERTED INTO THE FULL DEPTH OF THE HOLES IN THE WINDING CONE. KEEP A FIRM GRIP ON THE WINDING BARS AT ALL TIMES. USE A STURDY LADDER AND STAND TO THE SIDE OF THE WINDING BARS.

IF YOUR DOOR HAS A TORSION SPRING ASSEMBLY, YOU MUST MAKE SURE THAT THE WOOD ANCHOR PAD (SEE DRAWING) IS FIRMLY ATTACHED TO THE GARAGE WALL AS DESCRIBED IN THE DETAILED INSTRUCTIONS ON THE NEXT PAGE. FAILURE TO SECURELY ATTACH THE ANCHOR PAD COULD ALLOW THE SPRINGS TO VIOLENTLY PULL AWAY FROM THE GARAGE WALL, AND COULD RESULT IN SEVERE INJURY AND/OR PROPERTY DAMAGE. IN NO CASE SHOULD NAILS BE USED.

THE STEPS TO FOLLOW FOR THE INSTALLATION

STEP 5 - Installation of the torsion springs

For every type of elevation except for low head room elevations, the cable was installed to the bottom plates in the beginning of the installation, the next step is to pass the cable between the rails and the wall (behind the rollers) and install it to the drums that enroll the cables. Place the end of the cable with a bushing in the emplacement on the drum.

To have an identical tension on the two cables, the shaft being blocked with the pliers against the wall, by hand turn the drums until there is a tension on the cables and block it with pressure screws installed on the drums.

Cranking the springs.

Be extremely careful during this step.
The next step consists of cranking the springs.
This requires a particular attention because serious injuries may occur.

Leaving the pliers on the shaft against the wall, untighten the screws on the cone, for tightening using metal bars of half an inch (½") of diameter by eighteen inches (18") long. *(These are not included).*

Crank the spring by turning the clamping cone towards the ceiling. The number of complete turns to do is indicated on the tag on the spring.

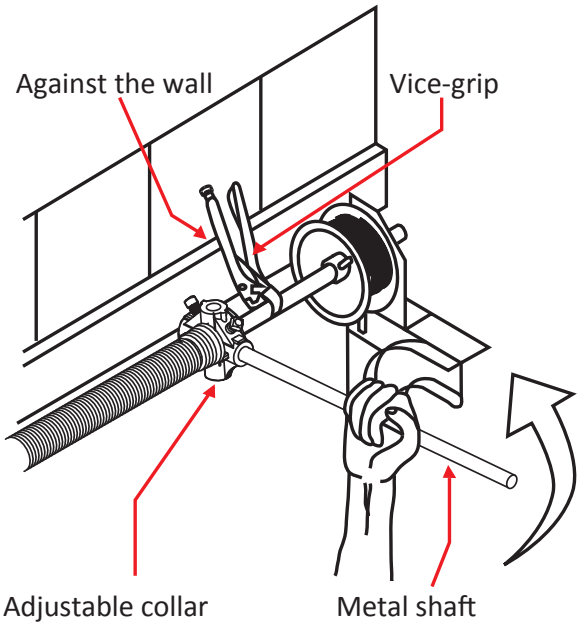

Never remove a bar from a hole before placing a bar in the next hole or without blocking the spring by the tightening the screws on the cone. Do not forget to block the clamping cone on the shaft before removing the steel bar when the cranking is finished.

Once the screws are tightly screwed, remove the bars and the pliers.

THE STEPS TO FOLLOW FOR THE INSTALLATION

STEP 5 - Installation of the torsion or the extension springs and the cables

Next, verify if the door is balanced. If the door opens as soon as it is released or if it closes itself rapidly hitting the floor, the springs have to be adjusted. Proceed by reducing the number of turns, if the door is too light or by increasing the number of turns, if the door is too heavy. Before proceeding to the adjustments, close the door and lock it.
Block the shaft with pliers and place a metal bar in the hole of the cranking cone. HOLD TIGHTLY and loosen the screws of the cone.

It is possible to readjust the spring of more or less half a turn if necessary. However, if the door has more than one spring, we suggest that you follow the number indicated on the springs and proceed to the adjustment of only one spring.

View of the installation from the interior.

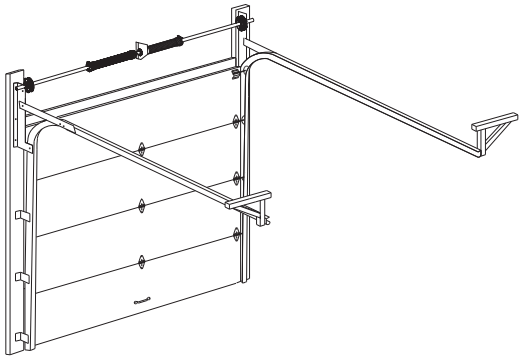

Installation of the extension springs and the cables

Lift the door to the maximum and block it in this position with pliers. (vice-grip)
Install the pulleys to the steel angles of the horizontal rails and the bolts on the rear bracket of the rail.

Install the 2 pulleys to the angles of the horizontal tracks with 3/8» x1 1/2 bolts plus nuts. Install the pulleys near the wall, pass the cable attached to the bottom bracket, in front of the pulleys, through the spring pulleys, Bring the cable back front to the angle, attach the cable to the angle with 3 hole plate and "S" hook.

Fix one of the ends of the spring where the bolt is and the other on the other end; install the pulley with the "U" and the bolt. The bolt is the wheel shaft of the pulley. Tie the steel cable to the bottom support andpass the other extremity over the pulley and fix it to the top of the vertical rail, the "S" hook to the steel angle of the horizontal rail.

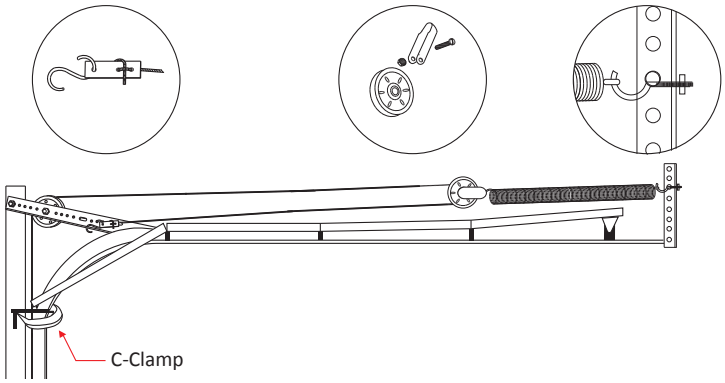

Repeat this operation for the other side. Remove the pliers and verify the functioning of the door. Some tension adjustments are maybe necessary, so raise the door to the maximum and block. Move the "S" hook to modify the tension according to the modifications desired.

DO NOT FORGET TO PASS A SAFETY CABLE INSIDE THE SPRING.

THE STEPS TO FOLLOW FOR THE INSTALLATION

STEP 6 - Installation of the weatherstrips

Place the edge of the weather strip at about half an inch (½") from the door, so that the two lips of the weather strip are against the door.

Screw and place the screw cover. It is important to use all the holes available to screw in the weather strip to make sure that is does not deform itself with time.

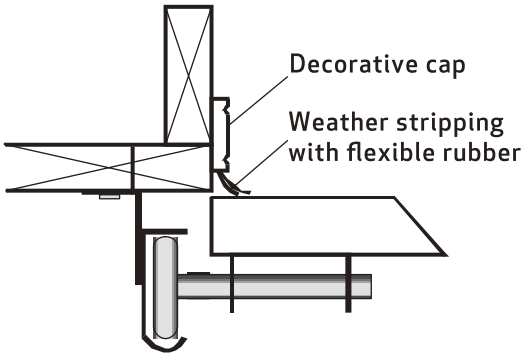

STEP 7 - Installation of the side lock

Place the box 1/2" at the extremity of the panel so that the lock can move freely in the hole intended for this use on the vertical rail.

Fix the box at the end of the door with wood screws.

FOR AN ELECTRICAL DOOR OPENER,
IT IS USELESS, AND EVEN DANGEROUS,
TO USE ANY LOCKING SYSTEM.

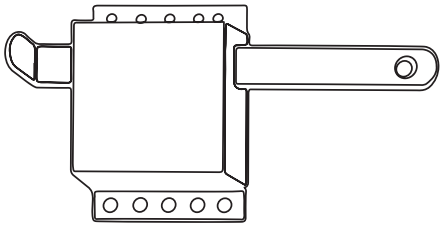

THE STEPS TO FOLLOW FOR THE INSTALLATION

STEP 8 - ANCHORAGE PLATES LOCATION

To install the handles and/or the electrical operator refer to the illustration below to identify the exact emplacement of the anchorage plates.

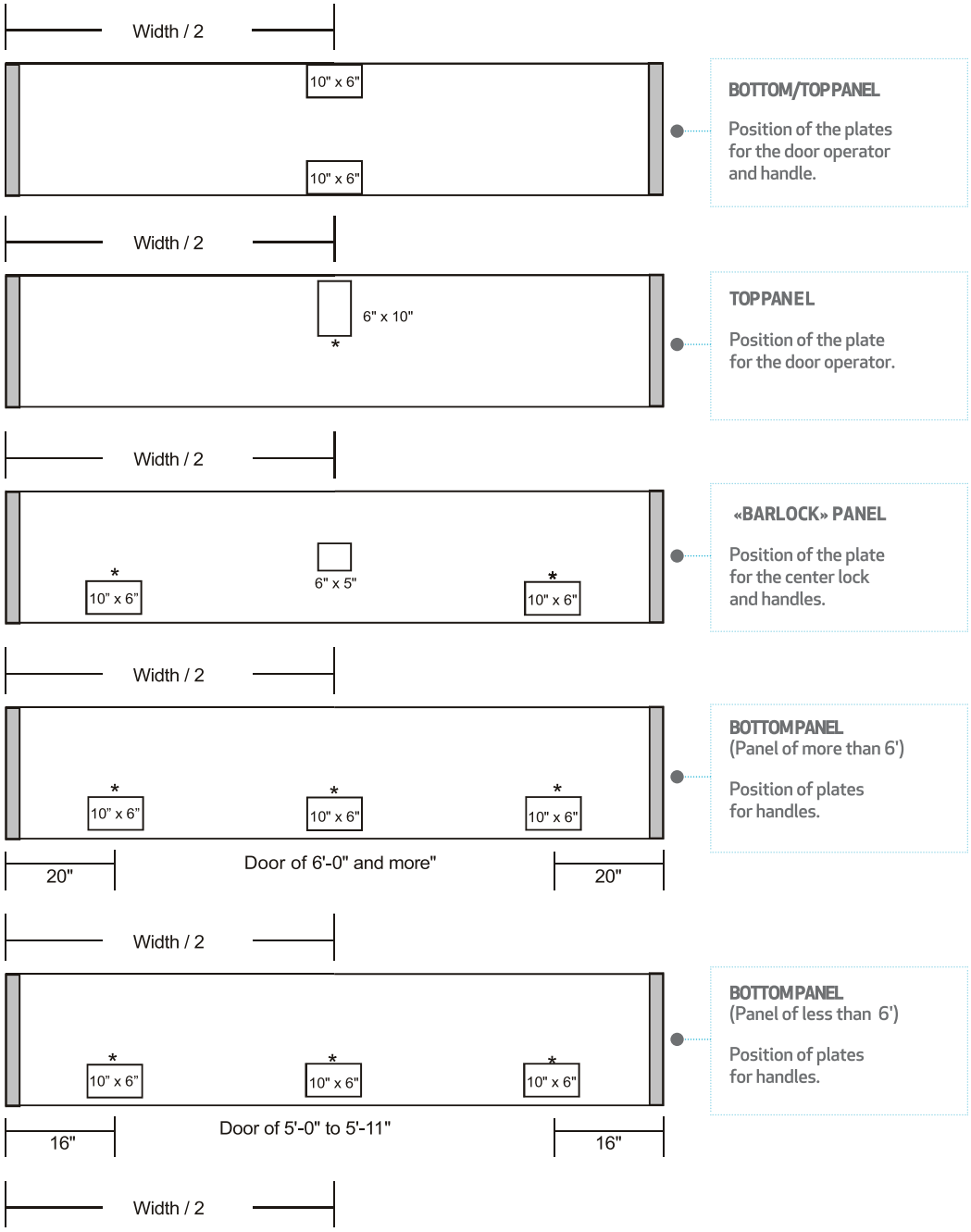

INSTALLATION OF LOW HEADROOM HARDWARE

Choosing low headroom hardware means that there is limited space available on top of the door. It is then very important to do a proper installation to avoid any problems in its operation.

The first part of the installation which includes the vertical and horizontal rails as well as the panels is identical to the standard elevation except for the installation of the top bracket as mentioned at page 15.

There are three types of movement available to work this kind of system.

1. Extension

The installation of this type of extension movement is done the same way as the standard elevation.

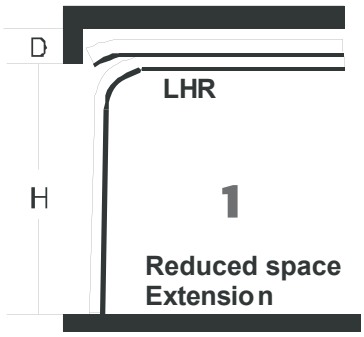

2. Front torsion

The cable being already installed to the bottom bracket (specific to this type of elevation and which surpasses the rail) since the beginning of the installation, what is left to do is pass the cable at the exterior of the rails and pass it into the pulley if necessary which will be installed near the radius and connect the drums.

So that there is an identical tension on the two cables, while the shaft is being blocked with pliers taking support on the wall, turn the drums manually until a tension is obtained on the cables and block them with the pressure screws installed for this use on the drums. Repeat the operations for the other side.

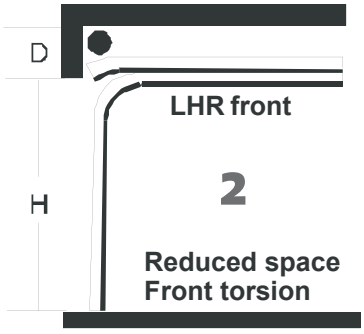

3. Rear torsion

The springs as well as the drums are situated at the back of the rails. The drums are at the exterior of the rails and the cable passes in the pulley longing the rails on the exterior side.

It is important to remember that the drums will have to be reversed compared to a standard elevation. Being placed behind the springs looking towards the door (inside), the right drum will have to be installed on the left and the left drum will have to be installed on the right side.

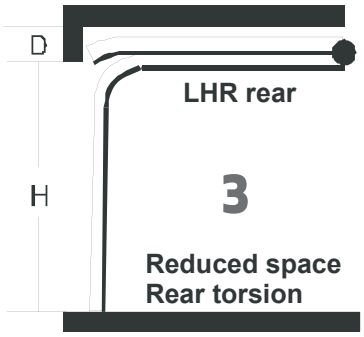

MAINTENANCE GUIDE

For door surface maintenance

We recommend:

1. Wash your garage door at least once a year with a mild soap and car brush.

2. Avoid powerful cleansers wich could damage the paint finish.

3. It is reccomended to apply a car wax coating on your door for a nice shine finish and easier cleaning surface.

For door jamb between pannels weatherstrips

We recommend:

1. Wash them with mild soap to preserve their appereance and flexibility.

2. Apply silicone-based lubricant on weatherstrips approximately once a year.

⚠ DO NOT USE AN OIL-BASED LUBRICANT!

For the hardware

We recommend:

1. Lubricate all moving parts: rollers, hinges, pulleys, springs and locking mechenism with silicone lubricant.

2. Inspect for soundnees all hinges, rollers, bolts and rails supports.

3. If you notice anything unusual, contact immediately a specialist in garage door maintenance and installation.

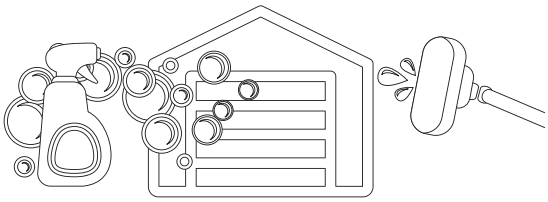

For electrical operating system

We recommend:

1. Inspect the garage door operating system every three months.

2. Open and close the door by hand. A properly balanced garage door will open and close easily. If the door is unbalanced or hard to open, immediately contact a garage door installation technician

3. Check the safety device (sensor edge along the bottom of the door). The garage door should reverse its movement automatically if an object or a person is located in the path of the door. If something seems amiss, immediately contact a garage door installation technician.

IMPORTANT MESSAGE

It is important to conduct the recommended maintenance to ensure a smooth operation of your garage door for many years. You can also hire a qualified installation technician to conduct the yearly maintenance.

To avoid injury, do not attempt to carry out springs, hinges and lifting cables adjustments by your-self.

Consult instead a GAREX installation technician.

RECOMMENDATIONS FOR ADJUSTING YOUR GARAGE DOOR

PROBLEM: The door becomes very heavy and only goes up halfway.

SOLUTION ; The torsion spring(s) has been installed on the wrong wingding side.

PROBLEM: The door opens very fast and is hard to bring back down.

SOLUTION : The spring has been wound too much, it is too tight. Adjust the tension according to the rigth number of turns.

PROBLEM: The door closes fast and is hard to lift.

SOLUTION ; The spring has not been wound enough, it is too loose. Adjust the tension to the rigth numbers of turns.

PROBLEM: The door works well but it goes back up 2 to 3 inches.

SOLUTION ; The spring is a little too tight. Adjust the tension on spring.

PROBLEM: The door does not close completely flush with the ground.

SOLUTION ; The weatherstripping is too tight. Loosen it and place it a little farther from the door (the base of the weatherstripping should be at about 1/2" from the door).

PROBLEM: The door is hard to open at first.

SOLUTION ; The weatherstripping is too tight. Loosen it and place it a little farther from the door (the base of the weatherstripping should be at about 1/2" from the door).

PROBLEM: The door is hard to open at the end.

SOLUTION ; The horizontal tracks are not perpendicular with the axis of the door. Use a tape measure to check this out. See Figure 17. 8- The top panel does not close completely. Adjust the position of the upper brackets. See Figure 16.

If the problems persist after using this guide, do not hesitate to contact a garage door installation specialist OR:

GAREX WARRANTY

GAREX guarantees all it's products that it has built against all construction defects due to materials or labour for a period of one (1) year from the date of purchase from one of its authorized dealers

ADDITIONAL WARANTIES ARE AVAILABLE FOR THE FOLLOWING:
Warranty against perforation
GAREX Guarantees its panels against perforation due to rust occurring from normal handling in normal conditions. Aluminium panels hold a lifetime warranty and steel panels are guaranteed for a period of twenty-five (25) years.
Warranty on residential doors
GAREX guarantees it's aluminum of light colors doors for a period of five (5) years against delaminating and dark color aluminium doors and steel doors for a period of one (1) year against delaminating. The guarantee is effective from the date of purchase from one of the authorized dealers.
Hardware Warranty
GAREX guarantees it's hardware for residential garage doors for a period of two (2) years. The warranty takes effect on the date of purchase from GAREX or one of its authorized dealers.
Paint Warranty
GAREX guarantees the original paint on its aluminium doors for a period of five (5) years and guarantees the paint on it's steel doors for a period of one (1) year. The warranty covers cracking and peeling.

WARRANTY LIMITATION

The warranty shall be fully applicable for the first year and shall decrease proportionally for the duration of its applicability. The value of the warranty is figured on the base price of the dealer. The warranty is in effect as long as the original buyer is owner of the house where the door was installed and has the original invoice.

The warranty does not apply if:	The warranty excludes:
a. The product has been modified by or for the customer;	a. All shipping costs for the replacement product;
b. The installation of the product was inadequate;	b. All installation and labour costs linked to the replacement product.
c. The maintenance and cleaning were not done according to state of the art standards.	c. All costs relative to operating loss and damages to goods, inventory and equipment due to defects of GAREX products;
	d. Any liability due to changes of models, materials, standard colors, etc.

GAREXserves the right to supply a product of similar quality but different color, where the product to be replaced has fade or to correct a problem associated to the color.
The replaced product or component remains the exclusive property of GAREX and must be returned to its main place of business, at the customer's expense.

a. When purchasing a GAREX product, the buyer accepts this warranty and acknowledges it as the sole official warranty, thereby excluding all other representations, warranties or conditions, formal or implied, given by anybody, except in writing by an authorized dealer of GAREX.
b. All claims must be submitted in writing to the manufacturer within thirty (30) days of the discovery of the alleged defect, and received by GAREX within the period of warranty; otherwise the warranty shall not be honoured.
c. The user of GAREX products agrees to carry out the yearly maintenance recommended and stipulated by GAREX in it's installation and maintenance guide.

NOTES :

GAREX

www.garexdoors.com